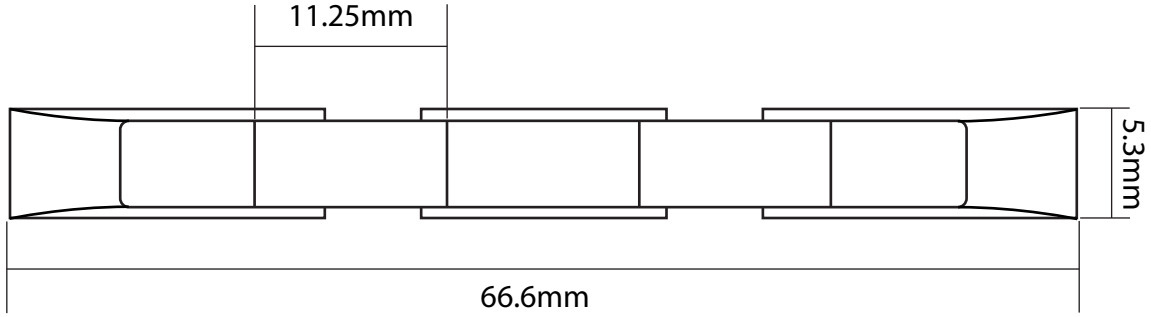

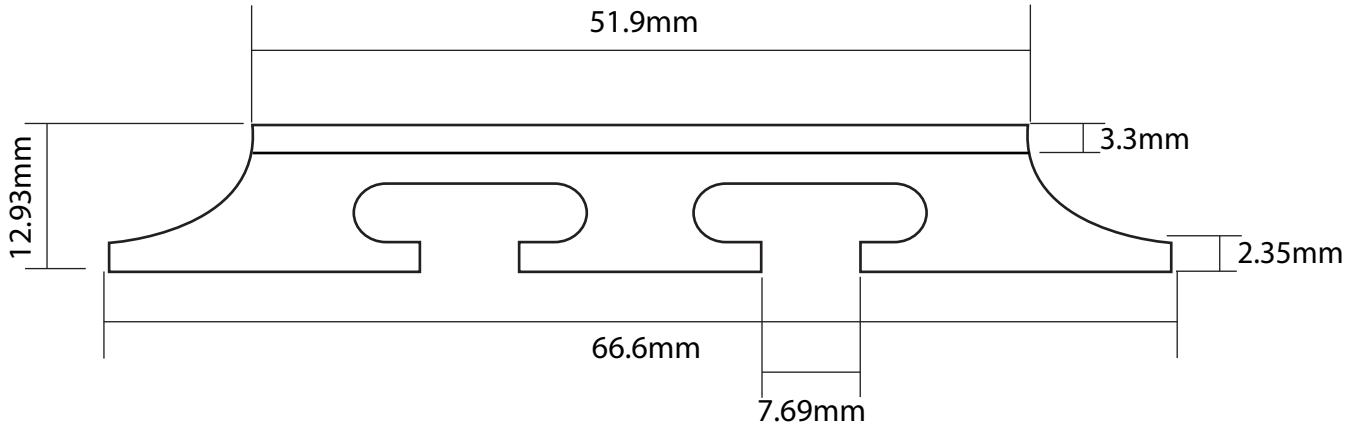

	MODEL		COMPANY	
	# 70		GROVER®	
	www.grotro.com			